Buildathon 2019 pg. 1

By: Chuck, W5USJ, May 28, 2019

Audio Amp

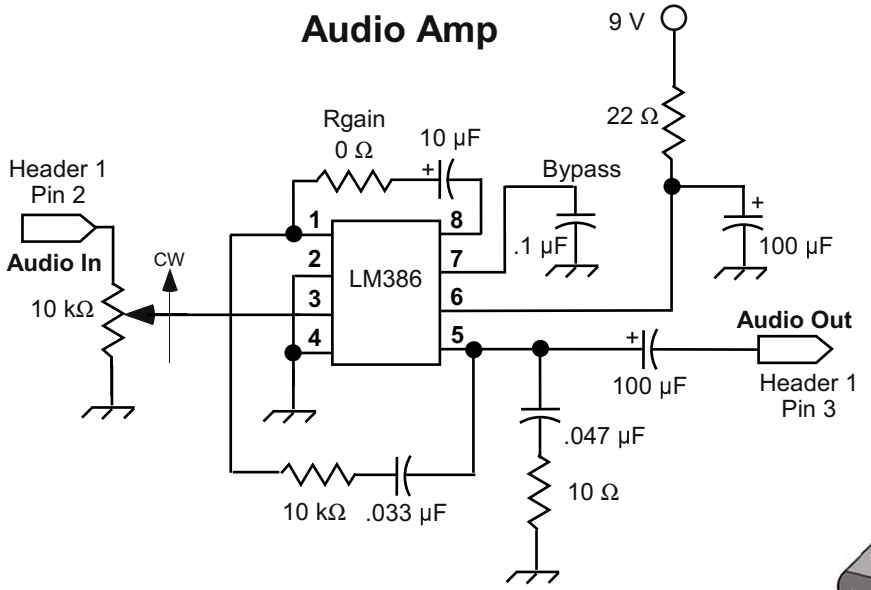

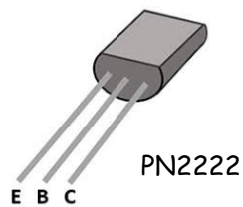

Audio Oscillator

(Twin-T)

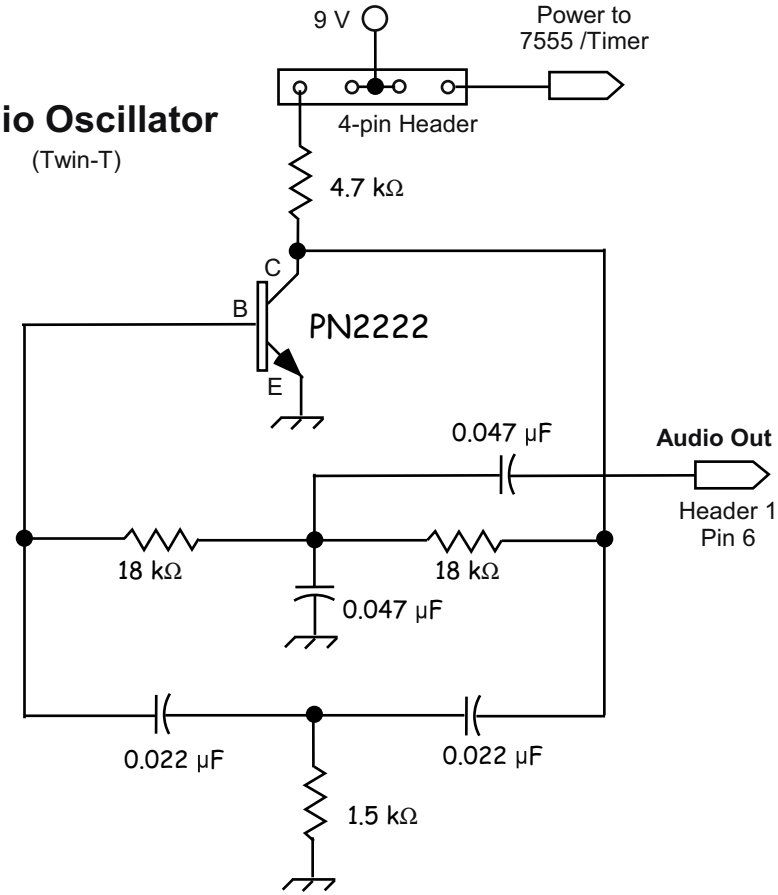
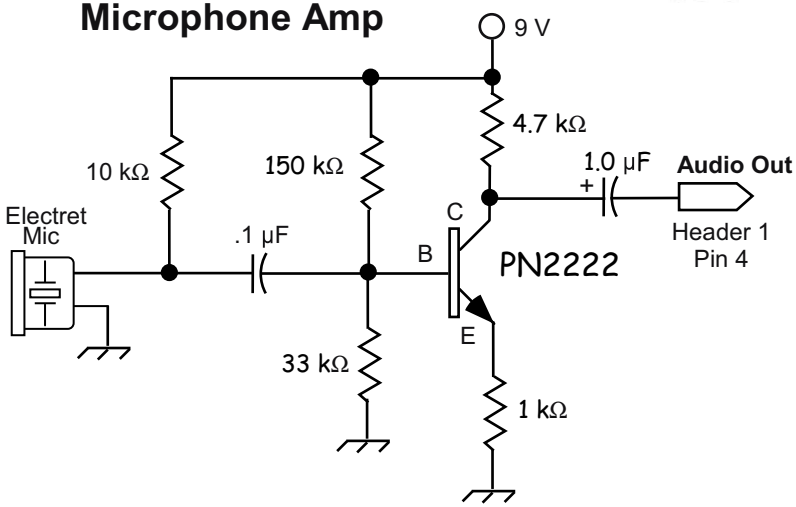
Microphone Amp