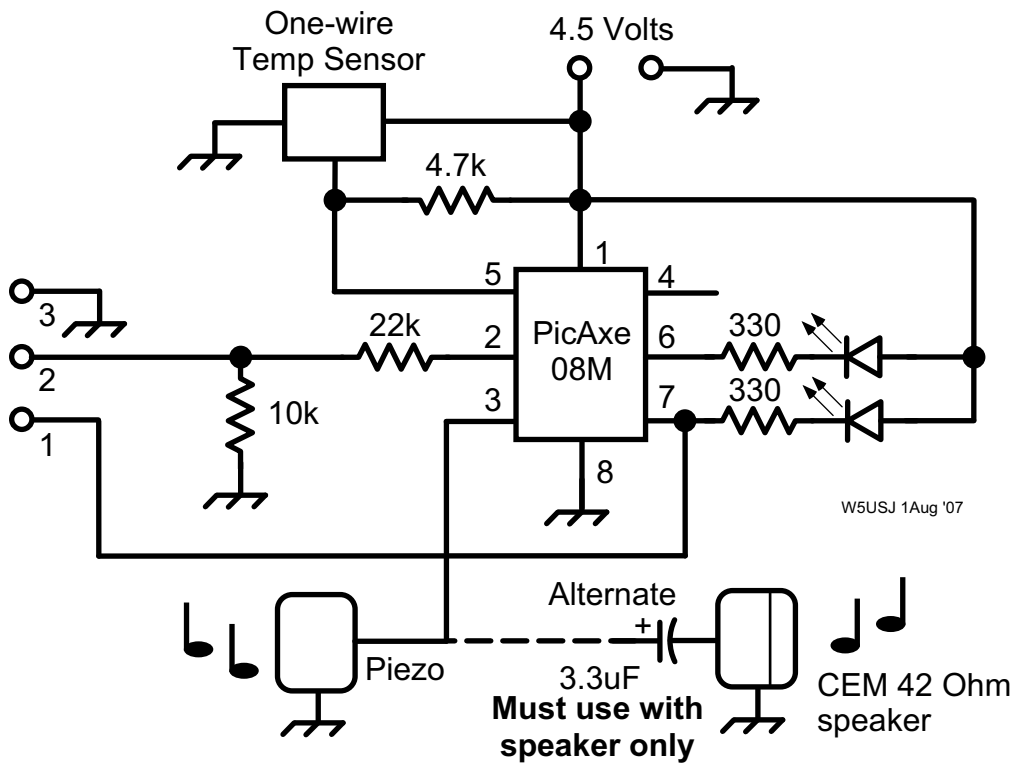
One-wire
Temp Sensor
4.5 Volts
4.7k
1
5
4
3
22k
2
PicAxe
08M
6
330
2
10k
3
7
330
1
8
W5USJ 1Aug '07
Alternate
+
Piezo
3.3uF
Must use with
speaker only
CEM 42 Ohm
speaker