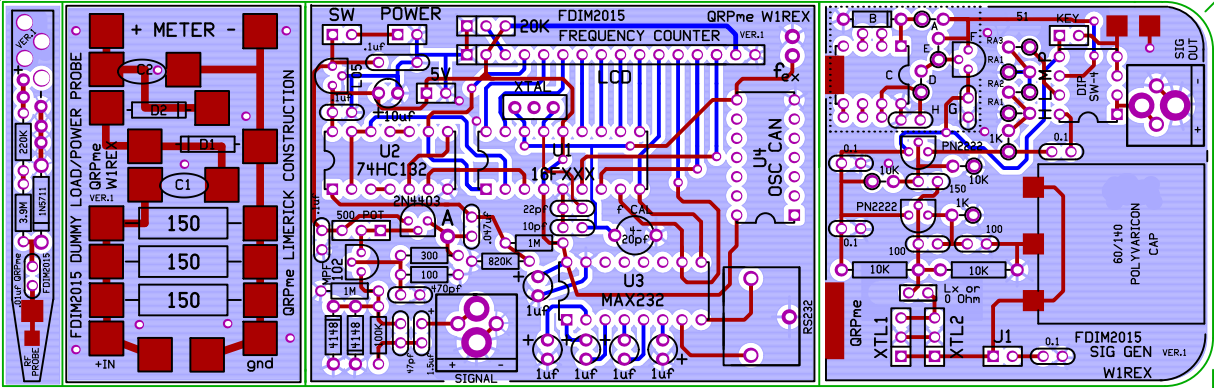

VER.1
220K
3.9M
1N5711
.01uf QRPme
FDIM2015
RF PROBE
FDIM2015 DUMMY LOAD/POWER PROBE
QRPme W1REX
VER.1
+ METER -
C2
D2
D1
C1
150
150
150
+IN
gnd
QRPme LIMERICK CONSTRUCTION
SW
POWER
20K
FDIM2015
FREQUENCY COUNTER
QRPme W1REX
VER.1
.1uf
5V
XTAL
LCD
fex
10uf
U2
74HC132
U1
16FXXX
U4
OSC CAN
2N4403
500 POT
A
.047uf
22pf
10pf
1M
f CAL
4-20pf
300
100
820K
MPF102
1M
470pf
U3
MAX232
1uf
4148
4148
100K
47pf
1.5uf
SIGNAL
1uf
1uf
1uf
1uf
RS232
B
A
E
F
C
D
H
G
51
KEY
RA3
RA1
RA2
RA1
DIP SW-4
SIG OUT
PN2222
1K
0.1
10K
10K
150
PN2222
1K
100
0.1
100
10K
10K
Lx or 0 Ohm
60/140 POLYVARICON CAP
QRPme
XTL1
XTL2
J1
0.1
FDIM2015
SIG GEN
VER.1
W1REX