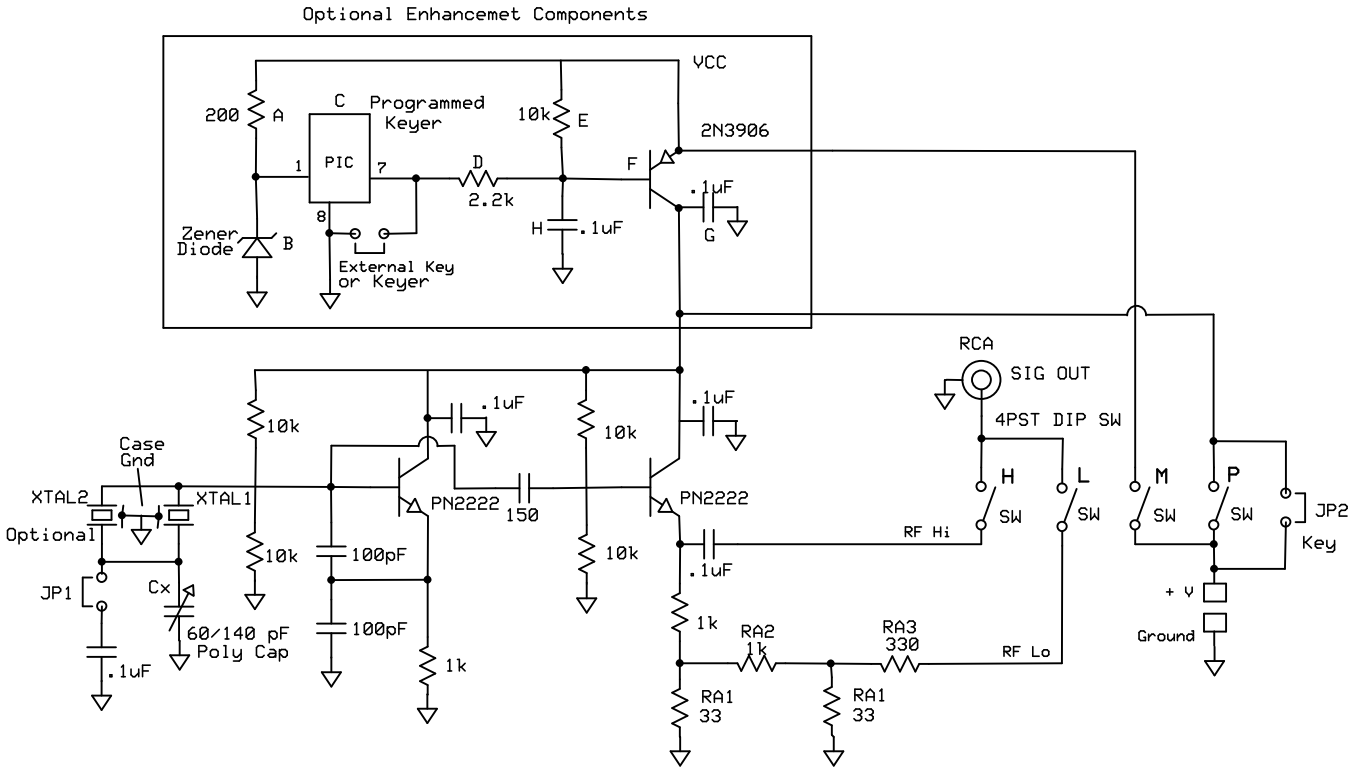

QRPme.com		
FDIM 2015 Buildathon Sig Gen Module.		
W5USJ Dwg	Version 1 25 Sep 2105	Sig Gen